BEDU POMPEN

Multistage Centrifugal Pumps

SKM-K

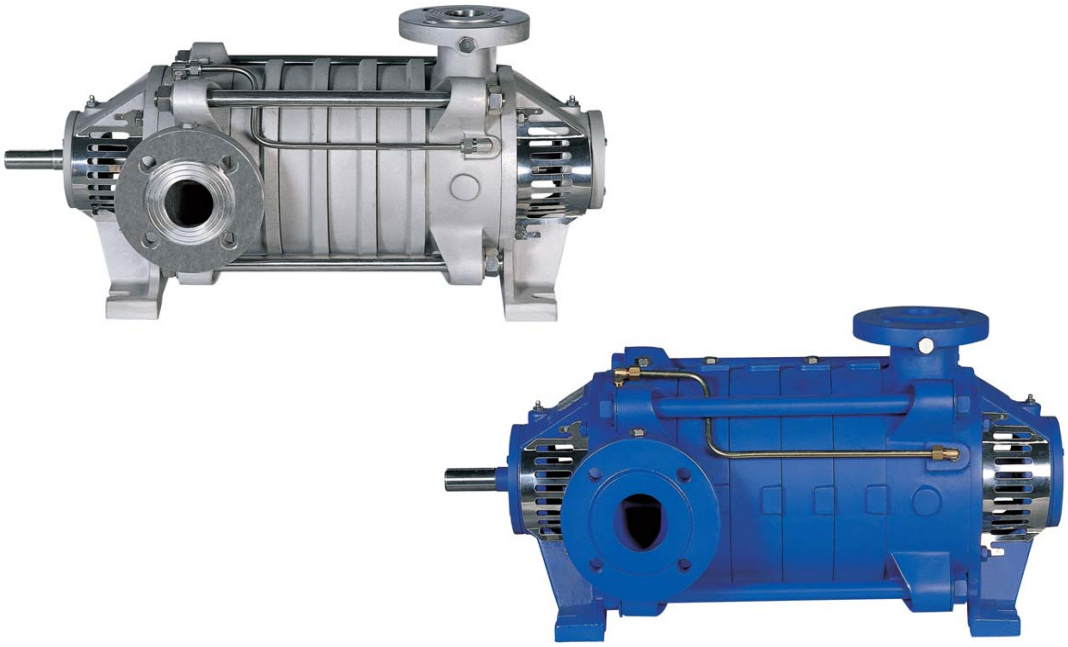

made for your process

Handled Liquids :

SKM-K Type pumps are suitable for clean liquids with low viscosity.

Technical Data

Discharge Nozzle Range	DN 80 up to 200 mm
Capacities	up to 700 m^3/h
Heads	up to 560 m
Speed	1450 - 2900 rpm
Operating Temperature	-10 °C up to 110 °C (140°C)*
Casing Pressure (Pmax)	30 bar (60 bar)*

(Pmax : Suction Pressure + Shut off Head)

(*) The material of pumps differ according to the type of pumped liquid , operating temperature and pressure. Contact our company for detailed information.

Applications

- General water supply
- Municipal water supply
- Pressurized water supply
- Boosters systems
- Boiler feed water and condensate
- Heating and air conditioning
- Irrigation , sprinkler
- Circulation
- Industry
- Fire - fighting systems
- Power plants.

Design Features

- Horizontal ring section multistage centrifugal pumps with closed impellers and diffusers.
- 5 models from DN 80 to DN 200.
- Suction nozzle flanges are according to ISO 7005 / PN 16 and discharge nozzle flanges are according to ISO 7005 / PN 40 (ISO 7005/PN 64).
- In standard production suction flange is placed on the right side and close to the coupling and discharge flange is at the other end and at top. Suction and discharge nozzle can be turned in multiples of 90°.
- Axial thrust is balanced by back wear rings / balancing holes system.
- Pump impellers are statically and dynamically balanced according to ISO 1940 class 6.3.

Bearings

- Pump shaft is supported by grease lubricated heavy-duty bearings.

Shaft seal

- Soft packing and different mechanical seals depending on application.

Rotation

- In standard production coupling is on the suction side and direction of rotation is clockwise viewed from driver end. Pump driven from the discharge side can be manufactured on special request. In this case direction of rotation is counter clockwise viewed from the driver end.

Pump Designation

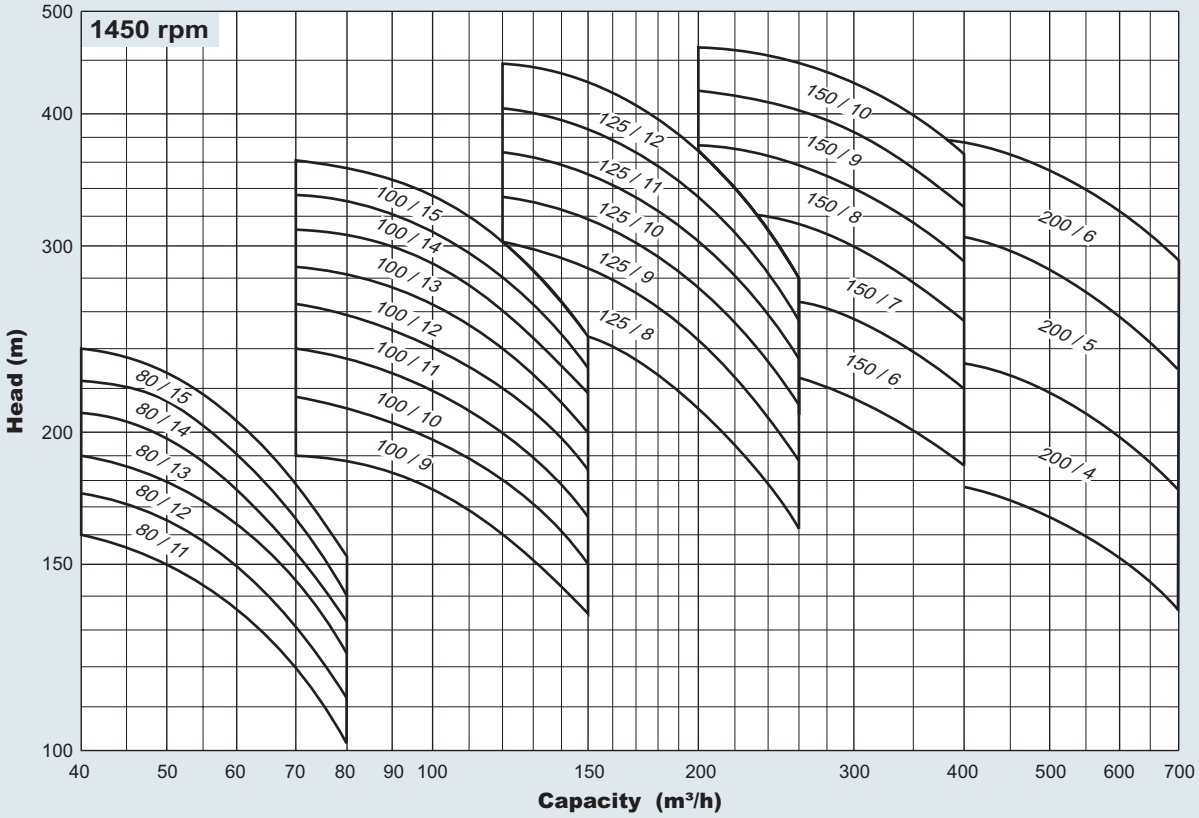
1450 rpm
Head (m)
Capacity (m³/h)
80 / 15
80 / 14
80 / 13
80 / 12
80 / 11
100 / 15
100 / 14
100 / 13
100 / 12
100 / 11
100 / 10
100 / 9
125 / 12
125 / 11
125 / 10
125 / 9
125 / 8
150 / 10
150 / 9
150 / 8
150 / 7
150 / 6
200 / 6
200 / 5
200 / 4

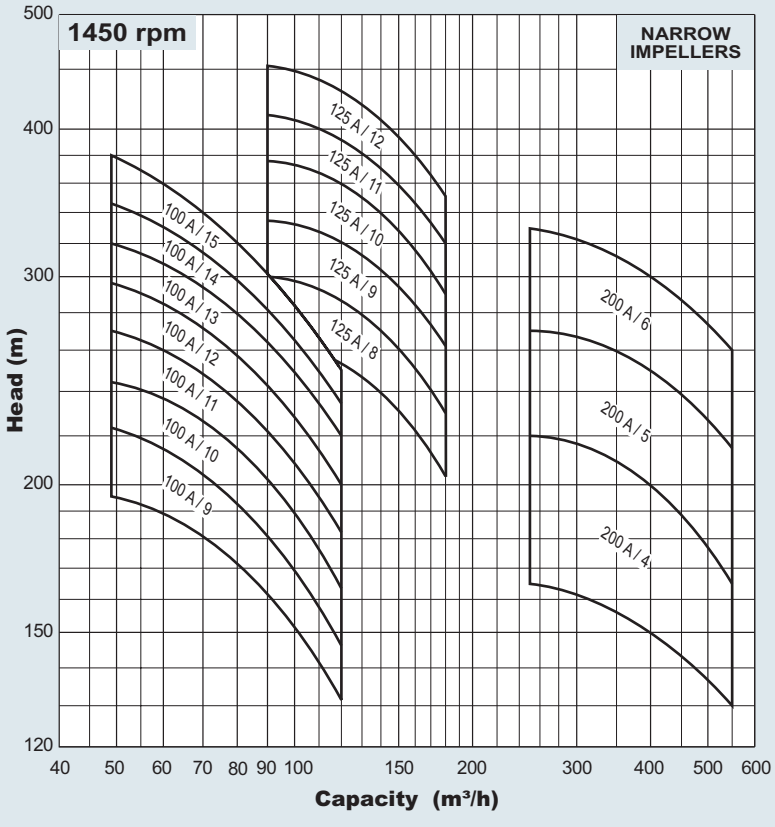
1450 rpm
NARROW IMPELLERS
Head (m)
Capacity (m³/h)
100 A / 15
100 A / 14
100 A / 13
100 A / 12
100 A / 11
100 A / 10
100 A / 9
125 A / 12
125 A / 11
125 A / 10
125 A / 9
125 A / 8
200 A / 6
200 A / 5
200 A / 4

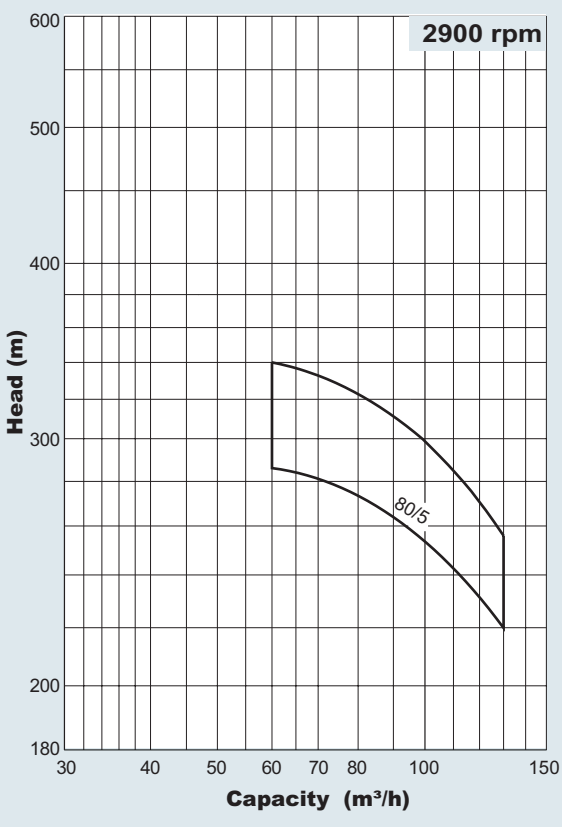
2900 rpm
Head (m)
Capacity (m³/h)
80/5

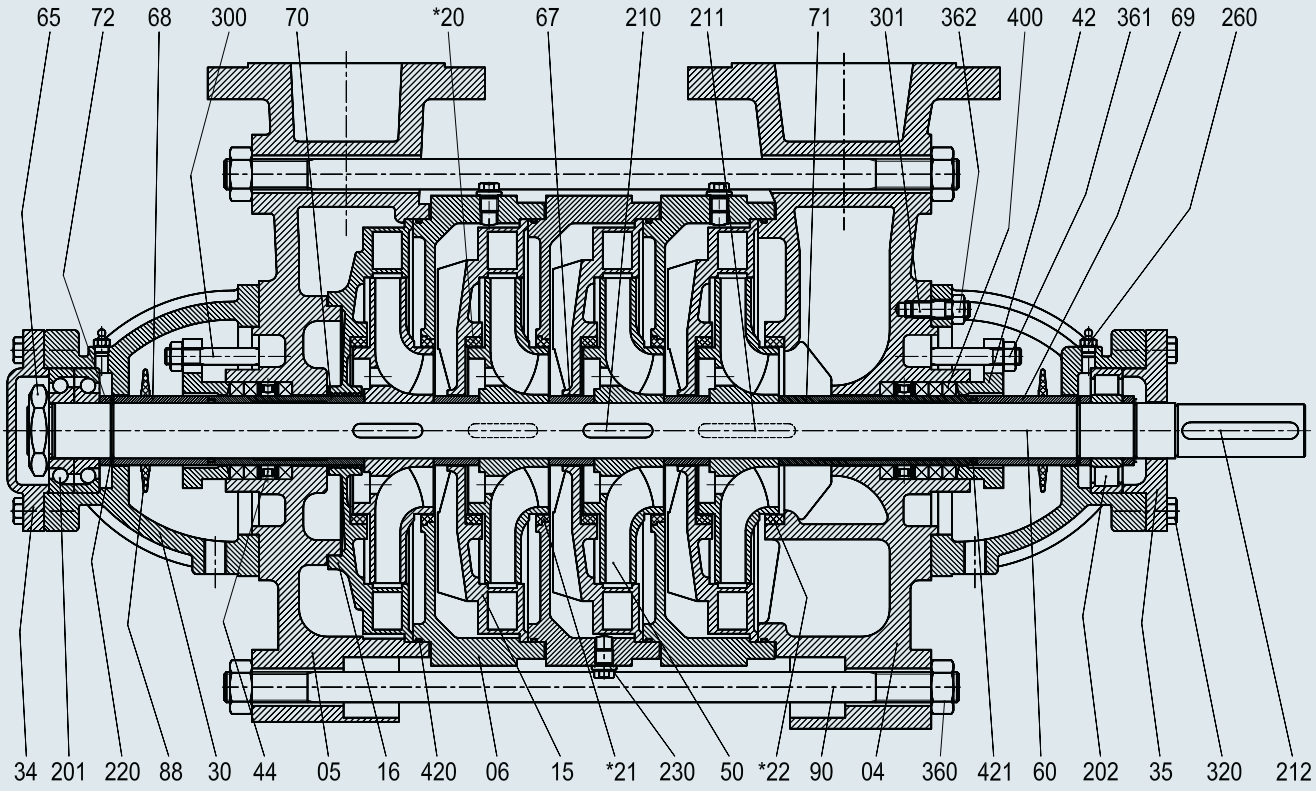

Mechanical Seal Application

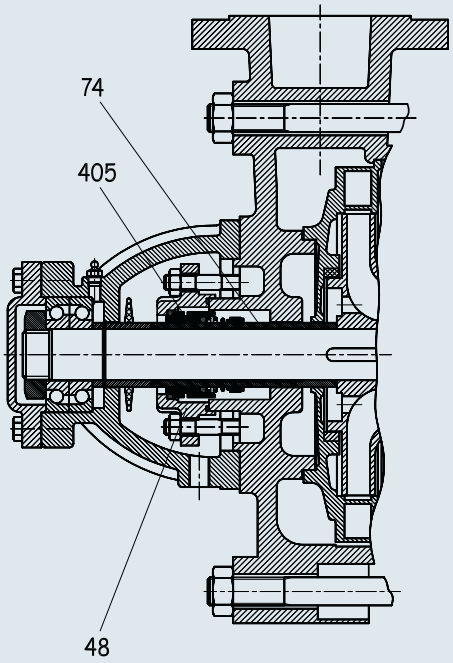

Temperatures : -10 °C up to 140 °C

Parts List

Part No	Part Name
04	Suction Casing
05	Discharge Casing
06	Stage Casing
15	Diffuser
16	Final Stage Diffuser
*20	Wear Ring *(Stage Casing)*
*21	Wear Ring *(Stage Casing)*
*22	Wear Ring *(Suction Casing)*
30	Bearing Housing
34	Bearing End Cover
35	Bearing Cover *(Coupling Side)*
42	Stuffing Box Gland
44	Lantern Ring
48	Mechanical Seal Cover
50	Impeller
60	Shaft
65	Shaft End Nut
67	Interstage Sleeve
68	Spacer Sleeve *(Discharge Side)*
69	Spacer Sleeve *(Suction Side)*
70	Shaft Protecting Sleeve *(Discharge Side)*
71	Shaft Protecting Sleeve *(Suction Side)*
72	Spacer Sleeve *(Discharge Side)*
74	Mechanical Seal Sleeve
88	Thrower
90	Tiebolt
201	Angular Ball Bearing *(Discharge Side)*
202	Cylindirical Roller Bearing *(Suction Side)*
210	Impeller Key
211	First Stage Key
212	Coupling Key
220	Retaining Ring
230	Plug
260	Grease Nipple
300	Stuffing Box Stud
301	Stud
320	Hex.Head Bolt
360	Hex.Nut
361	Hex.Nut
362	Hex.Nut
400	Stuffing Box Packing
*405	Mechanical Seal
420	O-Ring
421	O-Ring

(*) Optional

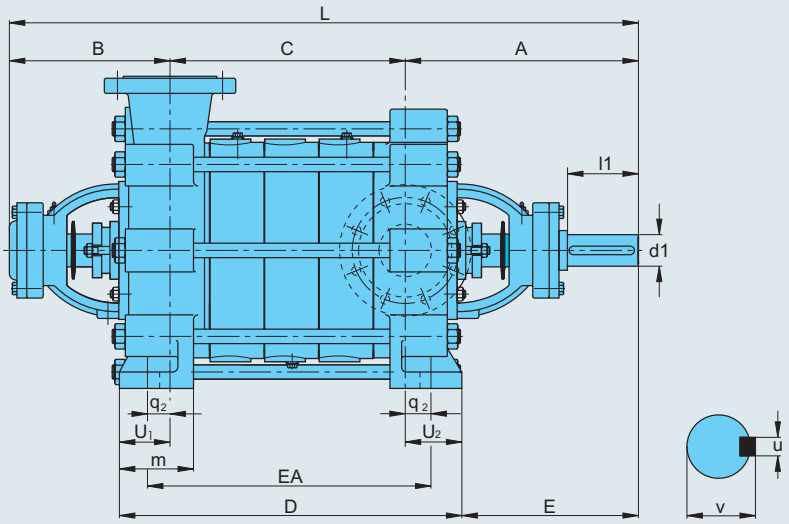

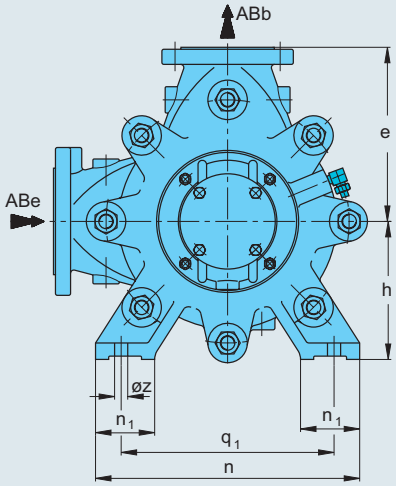

" C " according to the number of stages (mm)

Pump Type	4	5	6	7	8	9	10	11	12	13	14	15
80		444						942	1025	1108	1191	1274
100						933	1033	1133	1233	1333	1433	1533
125					970	1085	1200	1315	1430			
150			943	1088	1233	1378	1523					
200	777	947	1117									

Maximum no. of stages depending on shaft material

Pump Type	AISI 420		AISI 304 / 316	
	1450 rpm	2900 rpm	1450 rpm	2900 rpm
80	15	5	15	5
100	15	-	9	-
125	12	-	8	-
150	10	-	7	-
200	6	-	5	-

Pump Type	Dimensions (mm)																		Shaft End				Weight (kg)	
	ABe	ABb	A	B	EA	D	L	E	e	h	m	n	n1	q1	q2	øz	u1	u2	d1	l1	v	u	G1	g
80	100	80	321	250	C+84	C+124	C+571	259	265	210	85	410	90	340	42	15	62	62	42	110	45.3	12	146	26
100	125	100	389	285	C+96	C+140	C+674	319	300	250	90	450	90	370	48	15	70	70	48	110	51.8	14	205	42
125	150	125	412	300	C+110	C+160	C+712	332	375	300	112	572	105	450	55	20	80	80	58	140	62.8	16	370	75
150	200	150	486	360	C+130	C+208	C+846	381	425	350	130	655	110	550	65	26	103	105	70	140	74.9	20	630	120
200	250	200	515	385	C+130	C+210	C+900	410	500	400	130	650	100	550	65	27	105	105	85	170	90.4	22	945	200

NOTE : Right reserved to change without notice.

Pump Weight = G1 + (n x g) (n : number of stages)

Flange dimensions

Pump Type	Suction (PN 16)						Discharge (PN 40)					
	ABe	Df	k	s	n	bf	ABb	Df	k	s	n	bf
80	100	220	180	18	8	24	80	200	160	18	8	26
100	125	250	210	18	8	26	100	235	190	23	8	28
125	150	285	240	23	8	26	125	270	220	27	8	30
150	200	340	295	23	12	30	150	300	250	27	8	34
200	250	405	355	27	12	32	200	375	320	30	12	40

" n " number of holes

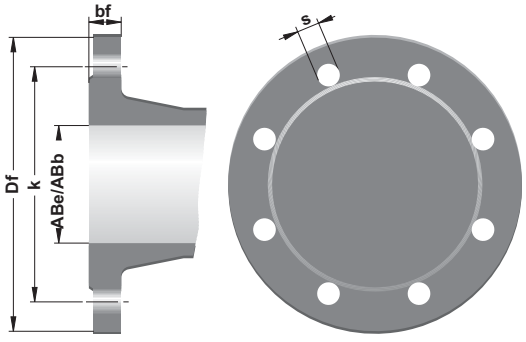

Bearing Types

1450 rpm

Pump Type	No. of stages	Bearing Type	
		Suction	Discharge
80	11...15	NU 309	2 x 7309
100	9....15	NU 310	2 x 7310
125	8....12	NU 2212	2 x 7312
150	6....10	NU 2215	2 x 7315
200	4.....6	NU 318	2 x 7318

2900 rpm

Pump Type	No. of stages	Bearing Type	
		Suction	Discharge
80	5	NU 309	2 x 7309

Material Options

Parts List	0.6025	0.7040	1.0619	1.4308	1.4408	2.1050.01	1.4021	1.4301	1.4401	1.4138	2.1090.01	2.1096.01
Suction casing	●	○	○	○	○	○						
Discharge casing	●	○	○	○	○	○						
Stage casing	●	○	○	○	○	○						
Diffuser	●	○	○	○	○	○						
Impeller	●	○	○	○	○	○						
Shaft							●	○	○			
Bearing housing	●	○	○	○	○	○						
Wear ring (Casing)	○	○								○	○	
Interstage sleeve						○	●	○	○		○	○
Spacer sleeve						○	●	○	○		○	○
Shaft protecting sleeve						○	●	○	○		○	
Mechanical seal (*)	DIN 24960 / EN 12756											

● *Standard manufacturing*

○ *Optional*

(*) **Optional :** Depending on customer requirement or request different types and brands of mechanical seals are applicable.

Material Equivalents

Description	DIN 17007	EN-DIN	ASTM
Cast iron	0.6025	GJL-250 (GG 25)	A 48 Class 40-B
Nodular cast iron	0.7040	GJS-400-15 (GGG 40)	A 536 Gr. 60-40-18
Cast steel	1.0619	GP240GH (GS-C 25)	A 216 Gr. WCB
Chrome nickel cast steel	1.4308	G-X6 Cr Ni 18.9	A 351-75 Grade CF8
Chrome nickel molybdenum cast steel	1.4408	G-X6 Cr Ni Mo 18.10	A 351-75 Grade CF8M
Chrome molybdenum cast steel	1.4138	G-X120 Cr Mo 29.2	-
Cast bronze	2.0975.01	G-Cu Al 10 Ni	B 148 C 95500
Cast bronze	2.1050.01	G-Cu Sn 10	B 584 C 90700
Cast bronze	2.1090.01	G-Cu Sn 7 Zn Pb	B 584 C 93200
Cast bronze	2.1096.01	G-Cu Sn 5 Zn Pb	B 584 C 83600
Chrome steel	1.4021	X20 Cr 13	A 276 Type 420
Chrome nickel steel	1.4301	X5 Cr Ni 18.9	A 276 Type 304
Chrome nickel molybdenum steel	1.4401	X5 Cr Ni Mo 18.10	A 276 Type 316

Flange positions

Clockwise rotation viewed from driver (Suction flange is on the motor side) :

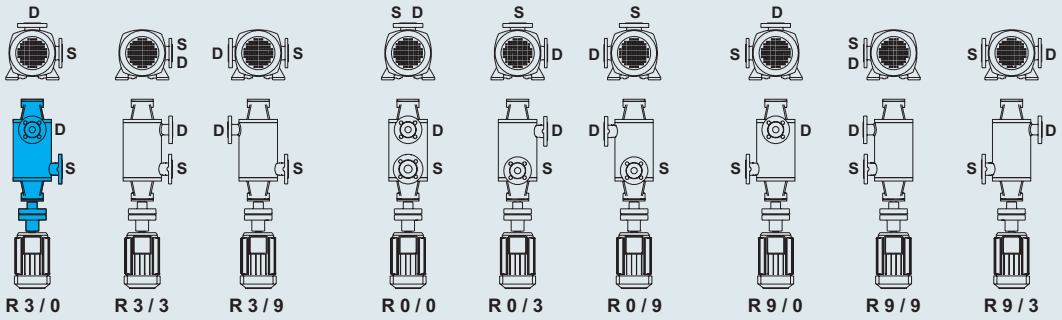

Counter clockwise rotation viewed from driver (Discharge flange is on the motor side):

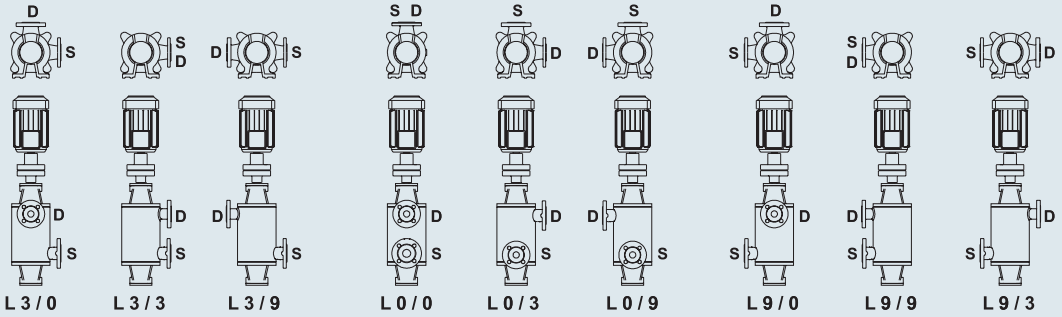

Explanation :

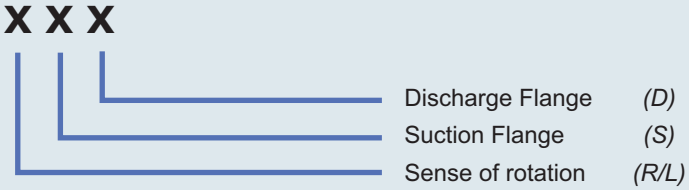

Sense of rotation viewed from driver end
R : Right
L : Left

Attention :

- In standard production coupling is on the suction side and direction of rotation is clockwise viewed from driver end (R 3 / 0).
- Flanges in parallel on the same direction are only possible with 3 or more stages for sizes from 80 to 125.

BEDU
POMPEN

made for your process

- Deskundig advies
- Een klantgerichte organisatie die zich aanpast aan de eisen en wensen van uw organisatie
- Innovatieve en maatwerkoplossingen
- Breed assortiment vloeistofpompen van gerenommeerde merken
- Meer dan 5.000 pompen en 20.000 onderdelen op voorraad
- Een snelle en passende oplossing voor al uw vraagstukken
- Wij zien het belang in van uw processen en de continuïteit van uw bedrijfsvoering
- Snelle reactie- en levertijden
- Een eigen Technische Dienst met uitgebreide testfaciliteiten, werkend vanuit onze eigen werkplaats of bij u op locatie
- Reparatie, onderhoud en revisie van alle soorten en merken vloeistofpompen
- Storingsdienst 24 uur per dag, 7 dagen in de week

BEDU POMPEN B.V.
Poort van Midden Gelderland Rood 10
6666 LT HETEREN
Nederland
Telefoon +31 (0)88 4802 900
Fax +31 (0)88 4802 901
E-mail info@bedu.nl

WWW.BEDU.NL

BEDU BELGIUM B.V.B.A.
Heuvelstraat 52
B-1981 HOFSTADE
België
Telefoon +32 (0)15 33 16 77
Fax +32 (0)15 33 16 73
E-mail info@bedu.be

WWW.BEDU.BE